DROP TOWER / MINI DROP TOWER / PANORAMIC TOWER

www.iepark.com

CODE	NET STROKE	COLUMN TYPE	TOWER HEIGHT	OPTIONS
8P-5.5R	3 m	○	5.5	Available With or without rotation of passengers unit (6 rpm)
12P-8.5R	5.4 m	○	12	Available With or without rotation of passengers unit (6 rpm)
12P-10.5R	6.4m	□	10.5	Available With or without rotation of passengers unit (6 rpm)
16P-13.4F	8.3 m	□	13.4	Customized three
16P-15.2F	10.8 m	□	15.2	Available With or without rotation of passengers unit (6 rpm)
8P-20R	-	□	20	Available With or without rotation of passengers unit (6 rpm)
12P-28R	-	□	28	Available With or without rotation of passengers unit (6 rpm)

IE PARK SRL SOLI BUMPER CARS
via Don P. Borghi, 3 - 42043 Praticello (RE) Italy
Tel. +39 0522 678526
www.iepark.com - info@iepark.com

facebook MI PIACE made in Italy

June 2017

DROP TOWER / MINI DROP TOWER / PANORAMIC TOWER

Drop TOWER

IEPARK's Drop Tower are engineered using hydraulic and steel ropes of latest technologies. The experience of vertical drop is a tabù of all ages, but the adrenaline is under control, thanks to the gentle yet sudden drop games created by iepark's technicians. Current production line is made of 5 different towers of increasing net stroke.
The seats is 8-10-12-16 seats. Rotation of the gondola (rpm is option).
Appropriately dimensioned decelerators represent the safest and latest safety unit in case of multiple failures of all controls.
Product is engineered also for standing outdoor with winds of 150km/h and instant impulse of 63mt/sec for 3 sec.
Custom made colors and theming is optional.

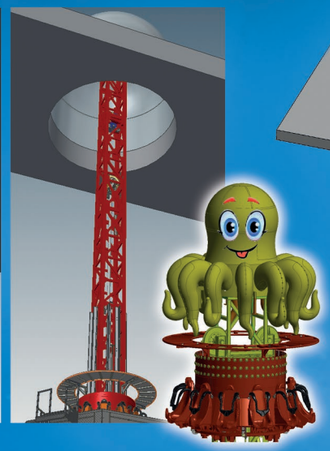

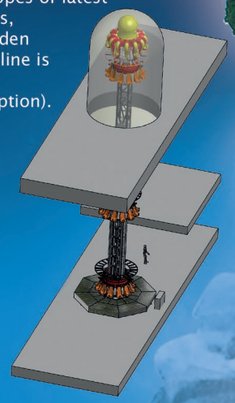

A total of five models makes up the range, two of which have a seating capacity of eight riders with the other three having capacities of 10, 12 and 16. The heights of the towers are 5.5m, 12m, 13.4m, 15.2m and 28m and all have the option of including fixed or rotating passenger gondolas. Loading and unloading on all models is simultaneous and hourly capacities range from 160 to 320 riders. The towers incorporate suitable decelerators which represent the latest and safest units of their type available and each product has been designed to operate either indoors or outdoors, the latter in winds of up to 150km/h. Custom colours and theming is also available. Several examples of the IE Park tower rides have already been delivered including a 12-seat, 16m drop tower to a customer in Taipei, Taiwan,
featuring a Treehouse theme; a 16m drop tower to the Philippines; a 5.5m indoor drop tower to Qatar; and a 28m tower now in production. “We are delighted to have added a selection of tower rides to our product range,” said IE Park sales director Andrea Munari. “Our designers and engineers have produced a range which is suitable for both indoor and outdoor operation and I am confident they will prove to be popular with operators of a variety of different venues.”

Drop (rotating) TOWER mod. 12P - 28R 28 mt

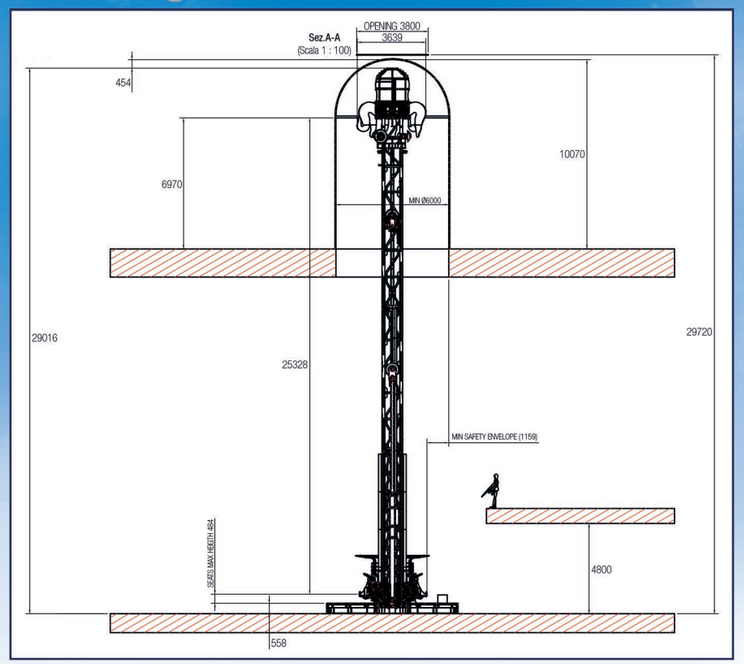

mod. 16P-13.4F

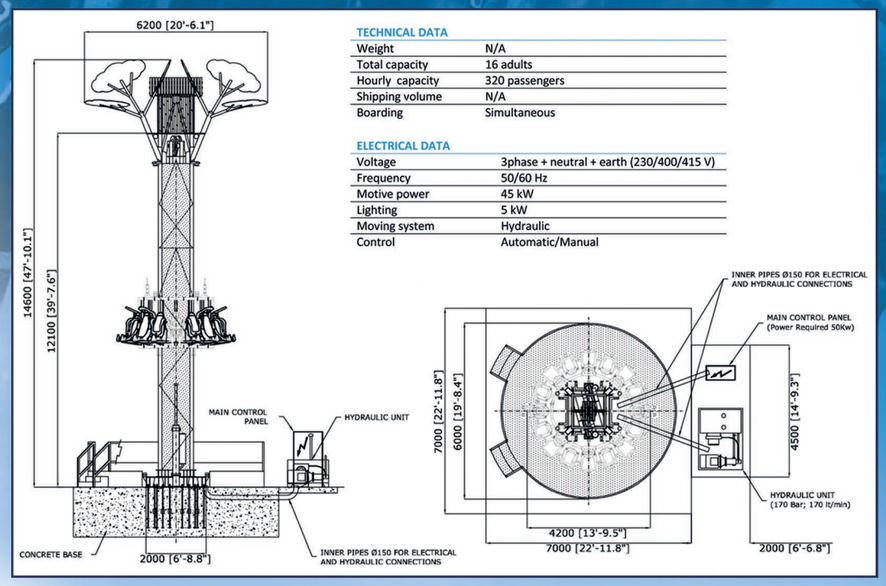

TECHNICAL DATA	
Weight	N/A
Total capacity	16 adults
Hourly capacity	320 passengers
Shipping volume	N/A
Boarding	Simultaneous

ELECTRICAL DATA	
Voltage	3phase + neutral + earth (230/400/415 V)
Frequency	50/60 Hz
Motive power	45 kW
Lighting	5 kW
Moving system	Hydraulic
Control	Automatic/Manual

Drop (rotating) TOWER mod. 12P - 10.5R

Drop (rotating) TOWER mod. 12P - 8.5R

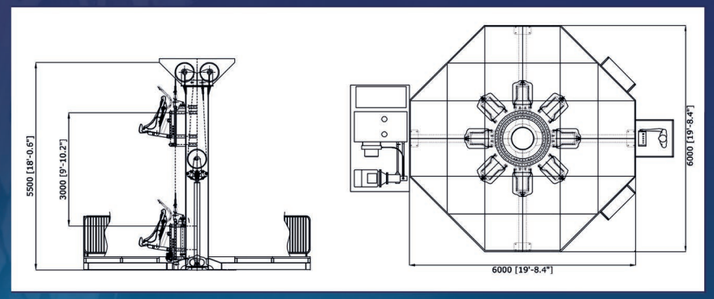

Mini Drop TOWER (rotating) mod. 8P-5.5R

(pneumatic)

Mini Drop TOWER

vertical drop only

The ride is a vertical ascent and bounced descent ride.
The seat cart is lifted approx. 4 m vertically
and then lowered by a hopping motion.

It is composed by the following main groups:
- Fixed structures;
- Motion(Pneumatic);
- Trolley where the passengers unit is fixed (capable of 6 seats).

The passengers are secure with a lap bar,
the control system(PLC) controls its status
and all the motion.

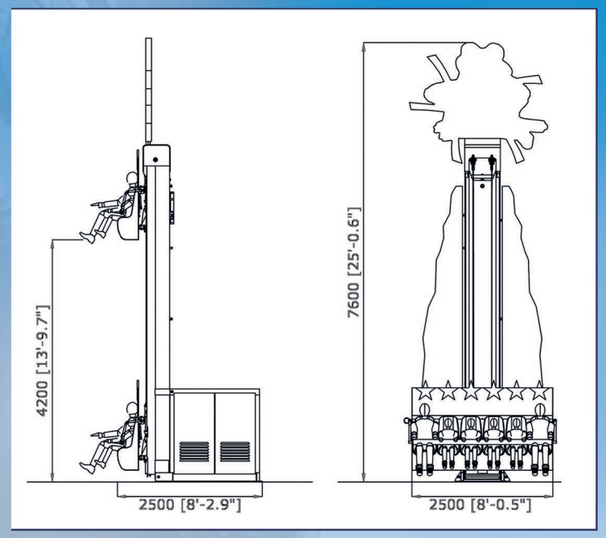

(hydraulic)

TECHNICAL DATA	
Weight	16.2 KN/ 16.55t (static load)
Nr of seats	6
Total capacity	6 children or 2 adults + 4 children
Capacity	120 passenger per hours
Boarding	Simultaneous
Shipping volume	1x20'ot

ELECTRICAL DATA	
Voltage	3phase + neutral + earth (230/400/415 V)
Frequency	50/60 Hz
Motive power	7.5 kW
Lighting	1 kW
Control	Automatic/Manual
Moving system	Pneumatic

Passengers Restrictions (minimum admissible): age 4 years old , height 101 cm - Accompanied

Panoramic TOWER

6 - 8 ballon (24 - 36 seats)

The structure of the Panoramic tower occupies a circular area.
The main structure consists of:

- A fixed base secured to a concrete floor by means of 16 feet which transmit all the structure loads to the ground;
- A column positioned on the fixed base;
- A central basket that slides on 6 guideways of the column, driven by two hydraulic cylinders;
- A rotating basket connected to the central one by a fifth wheel and moved independently from the column;
- A rotating structure consisting of 8 brackets firmly secured to the rotating basket, upon which 8 gondolas are hung;
- 8 gondolas which can carry 4 adult each.

mod. Circus

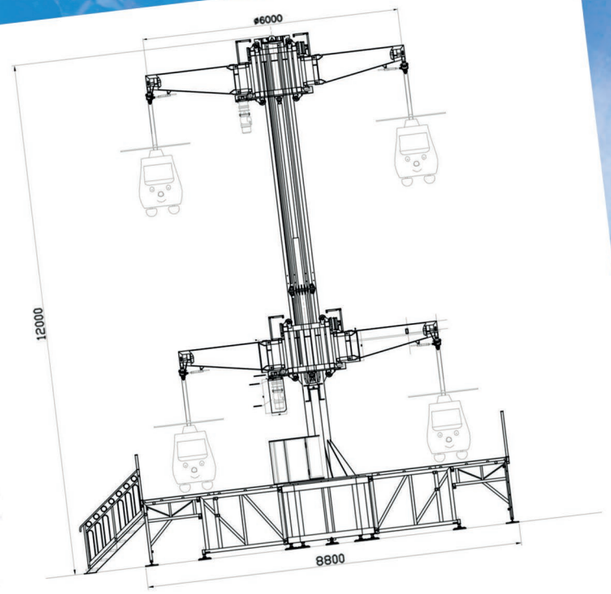

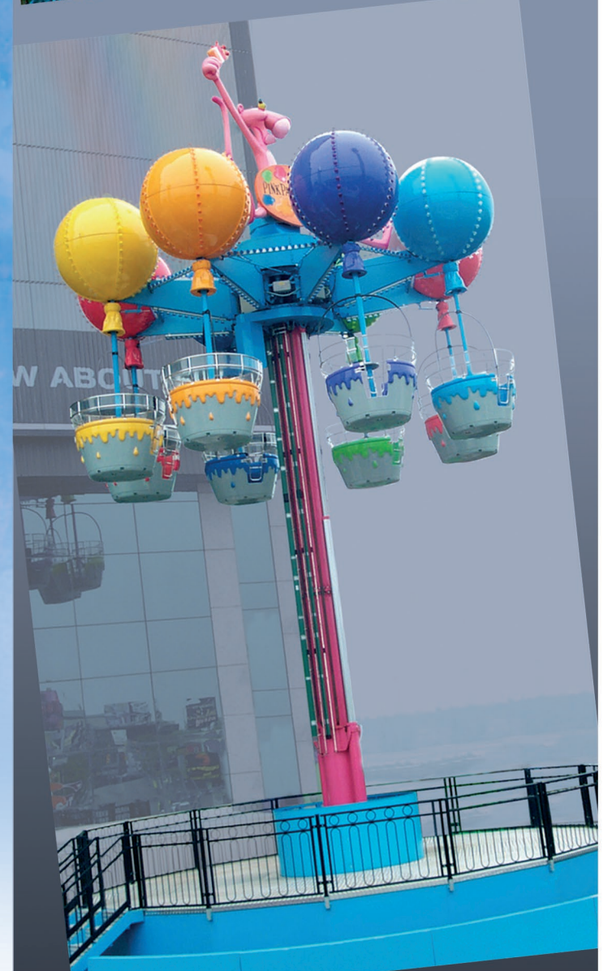

mod. Palio

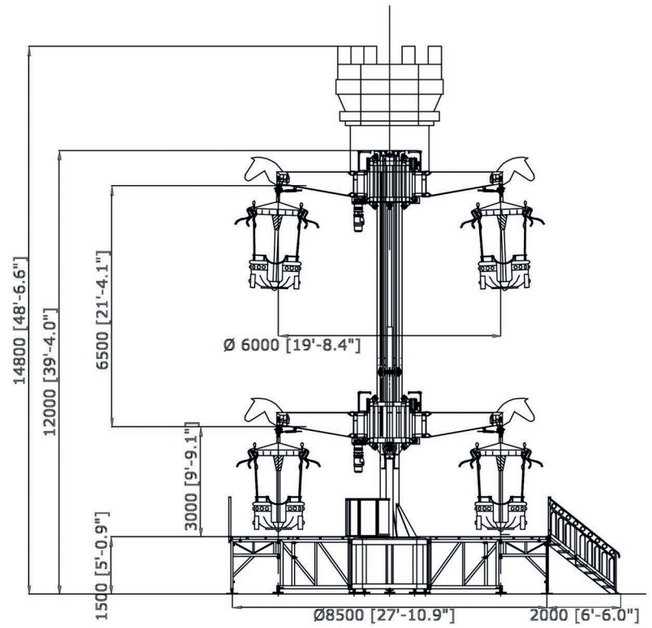

mod. Balloon Tower

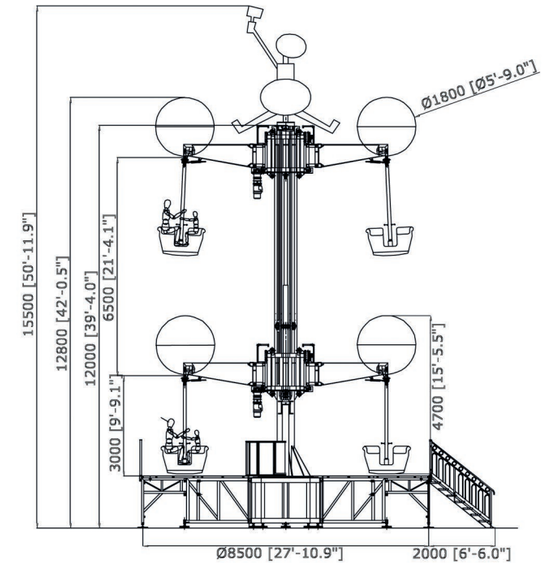

By courtesy of C.N.H.